Pull-Off Spray Deck Mount Single Hole with 8" Swivel Spout with Right Metal Traditional Lever

Model #: 1272-MT-

JACLO®
Confidence from start to finish.™

FEATURES:

- 8" Pull-off spray swivel spout
- Single lever
- Single hole design allows for multiple choices of placement on sink or counter
- Patented pull off spray design
- Push/pull spray head diverts from stream to spray
- Silicone nozzles for easy cleaning
- Plastic coated stainless steel hose for easy cleaning
- Built in air gap
- Lifetime ceramic cartridge
- Perfect addition for bar or pantry sinks
- Requires standard 1 $^{3}/_{8}$"-1 $^{5}/_{8}$" faucet hole drilling

AVAILABLE FINISHES:

Polished Stainless (PSS) Brushed Stainless (BSS)

SPECIFICATION DRAWING:

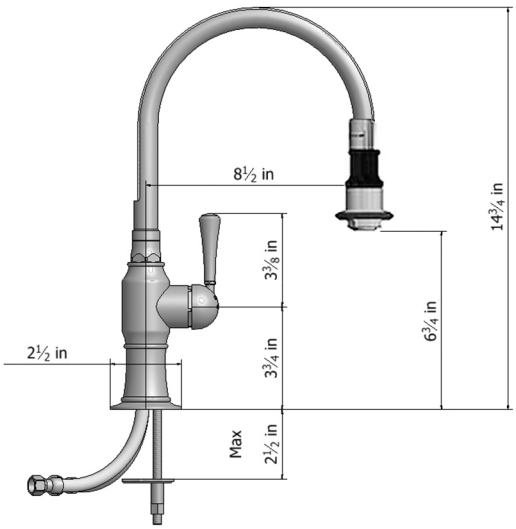

AVAILABLE HANDLES:

BC-

BT-

MC-

MT-

WC-

WT-